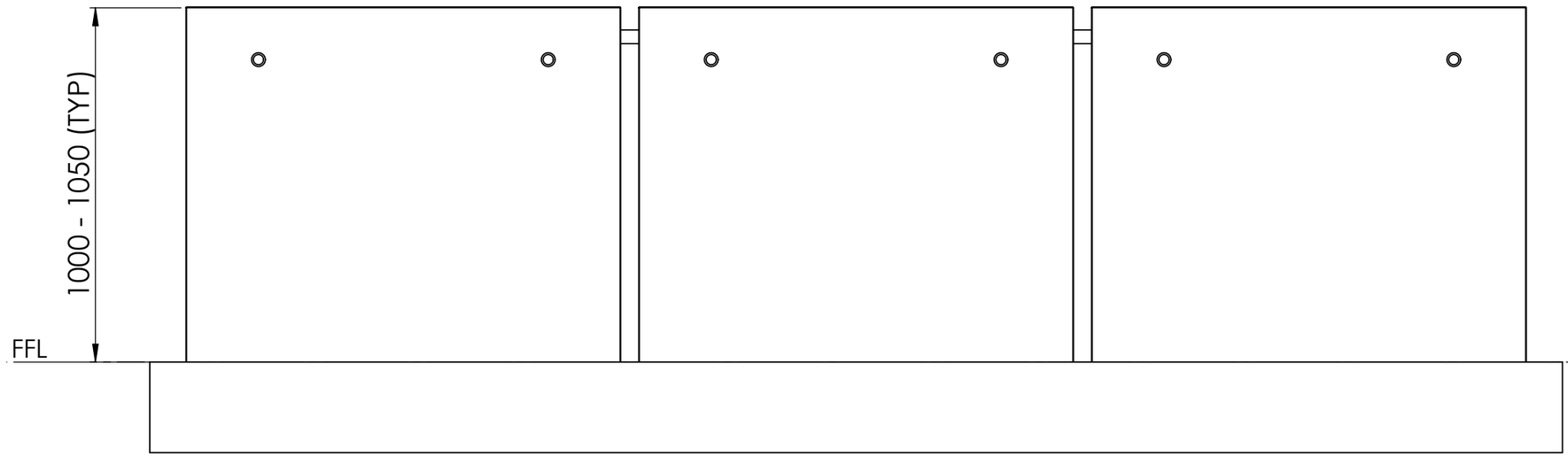

FRONT VIEW

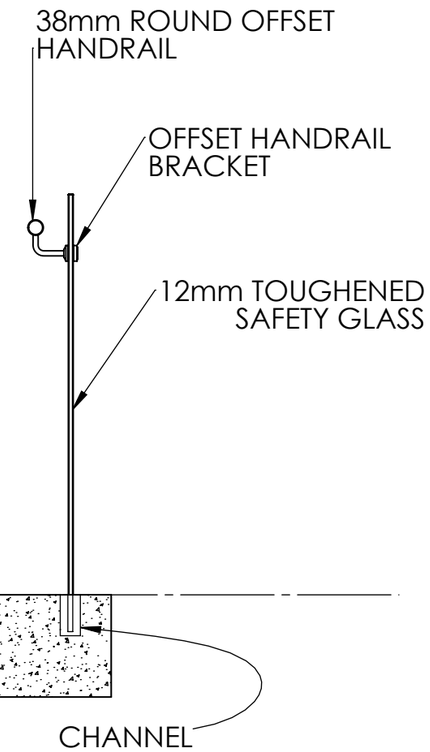

SECTION

GROOVE BALUSTRADE WITH 38mm ROUND OFFSET HANDRAIL