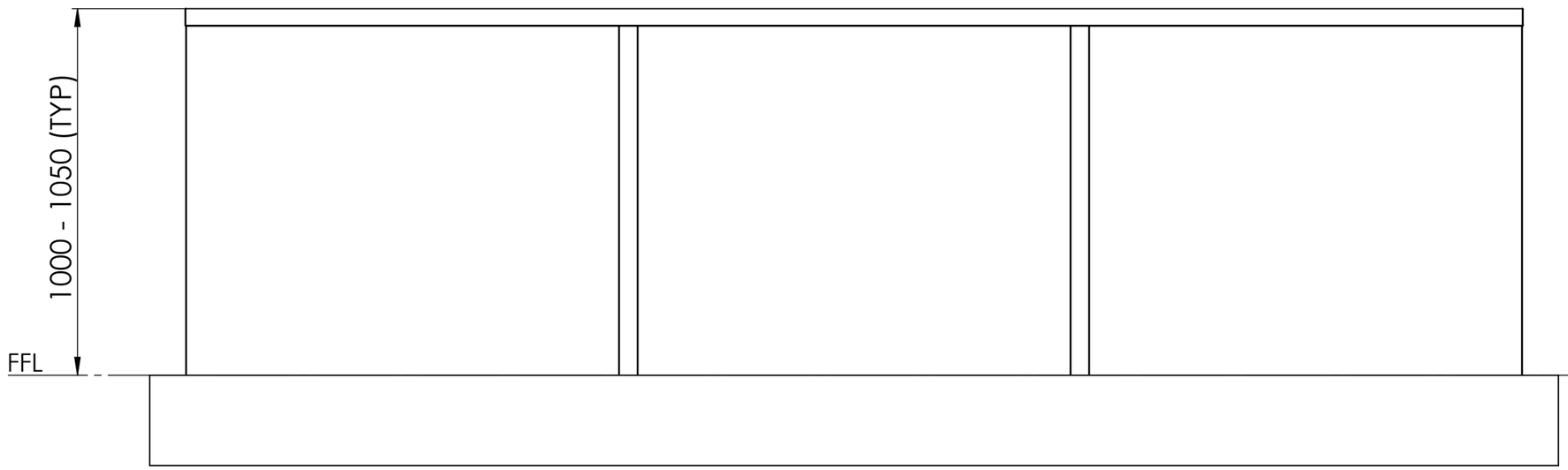

FRONT VIEW

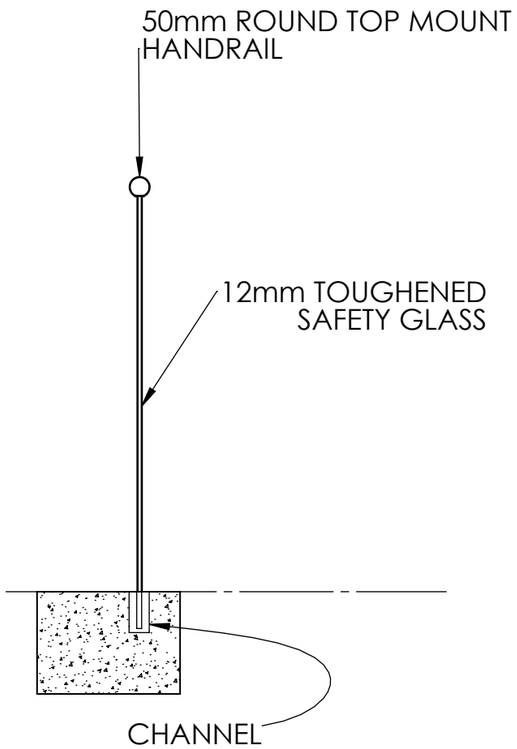

SECTION

GROOVE BALUSTRADE WITH 50mm ROUND TOP MOUNT HANDRAIL