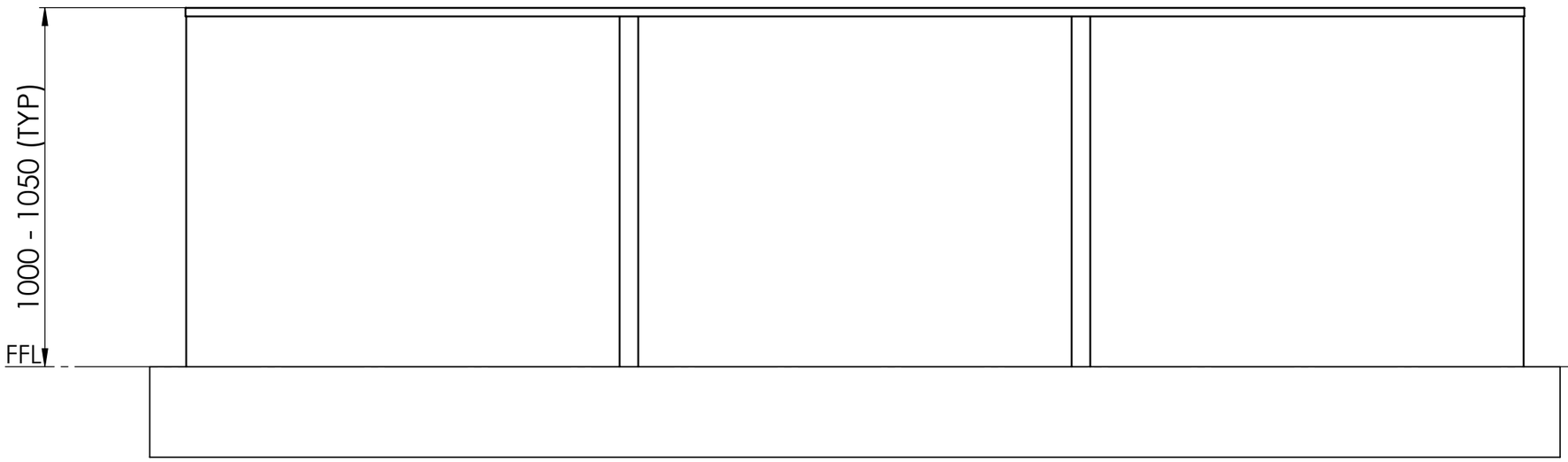

FRONT VIEW

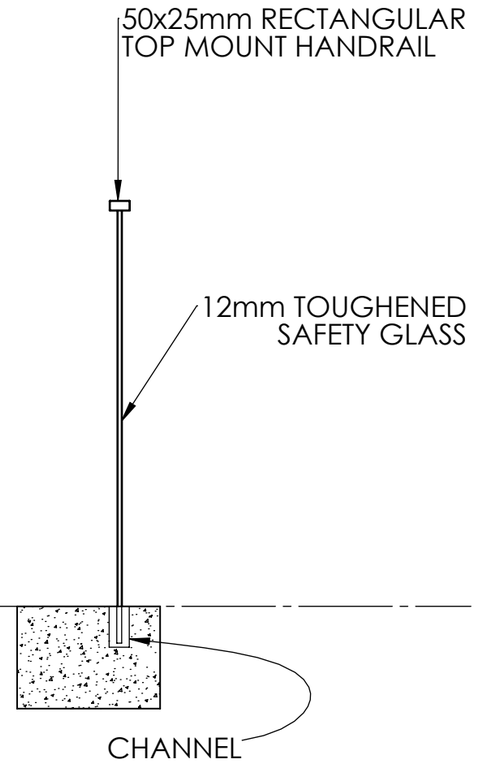

SECTION

GROOVE BALUSTRADE WITH 50x25mm RECTANGULAR TOP MOUNT HANDRAIL