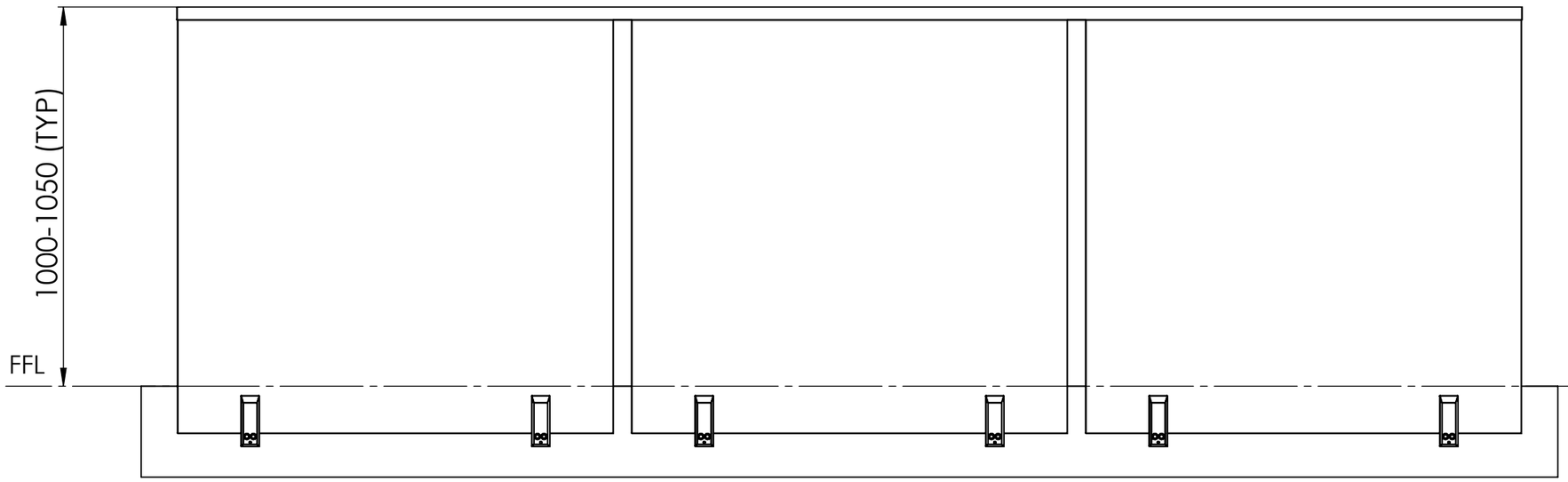

FRONT VIEW

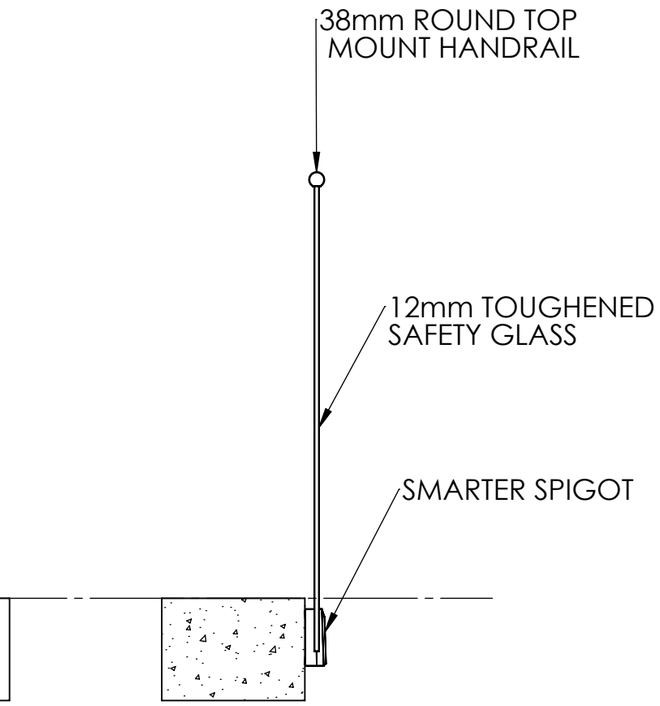

SECTION

SMARTVIEW BALUSTRADE WITH 38mm ROUND TOP MOUNT HANDRAIL