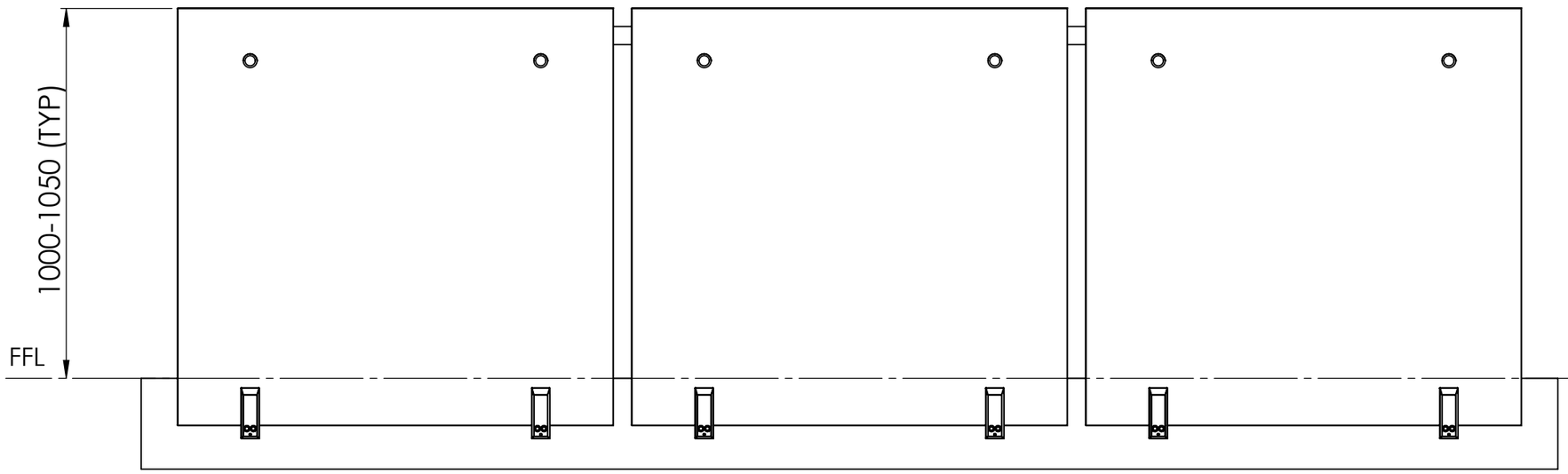

FRONT VIEW

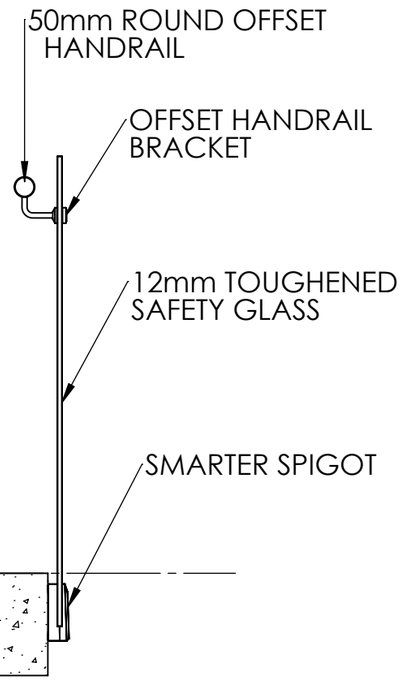

SECTION

SMARTVIEW BALUSTRADE WITH 50mm ROUND OFFSET HANDRAIL