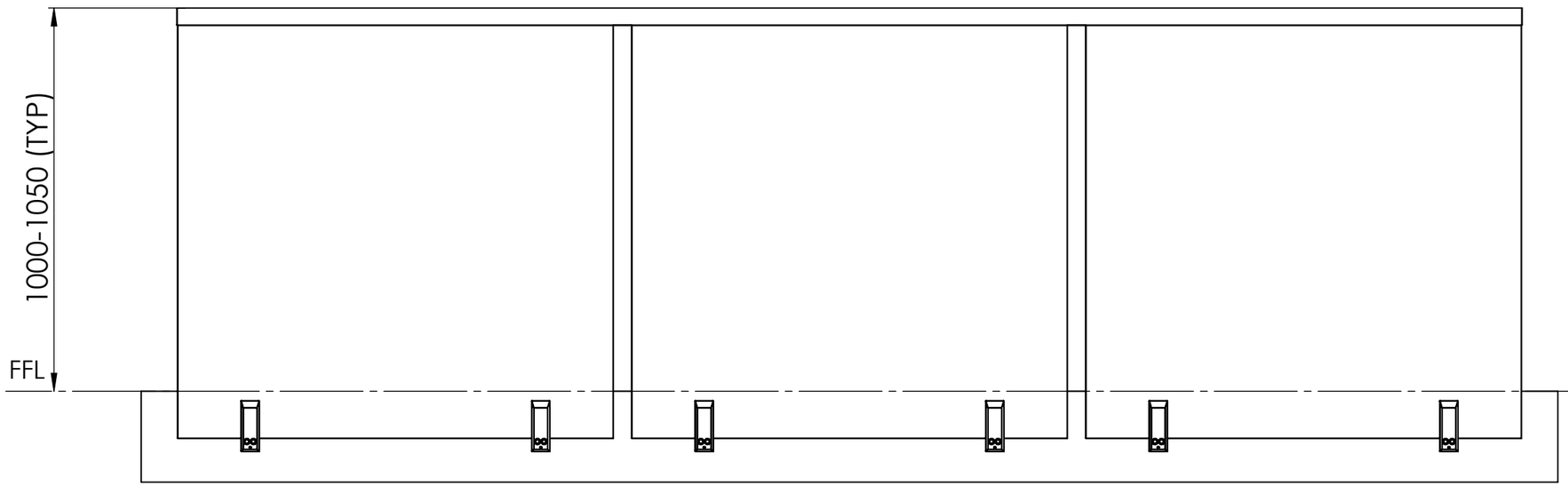

FRONT VIEW

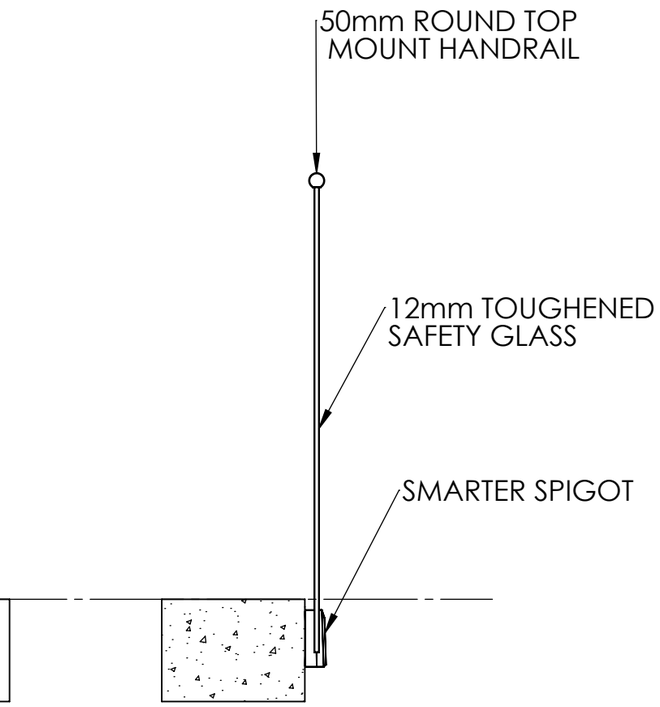

SECTION

SMARTVIEW BALUSTRADE WITH 50mm ROUND TOP MOUNT HANDRAIL