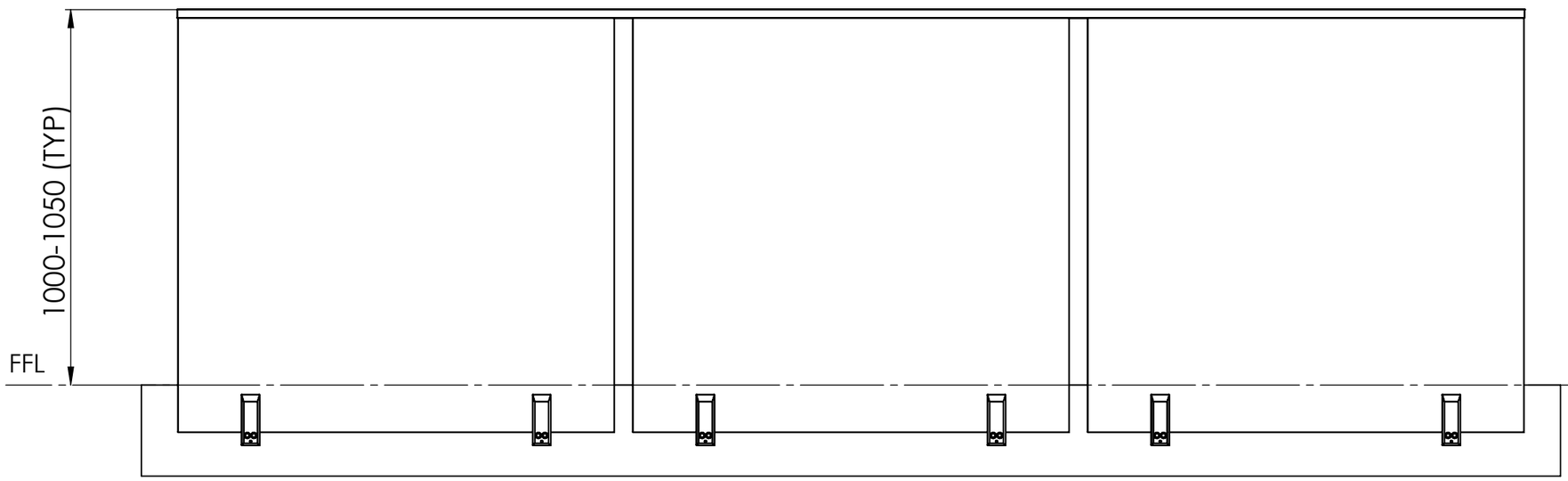

FRONT VIEW

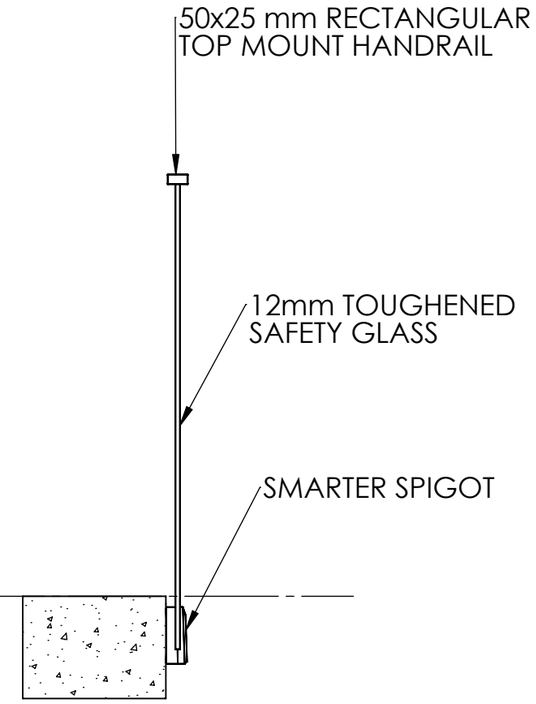

SECTION

SMARTVIEW BALUSTRADE WITH 50x25mm RECTANGULAR TOP MOUNT HANDRAIL